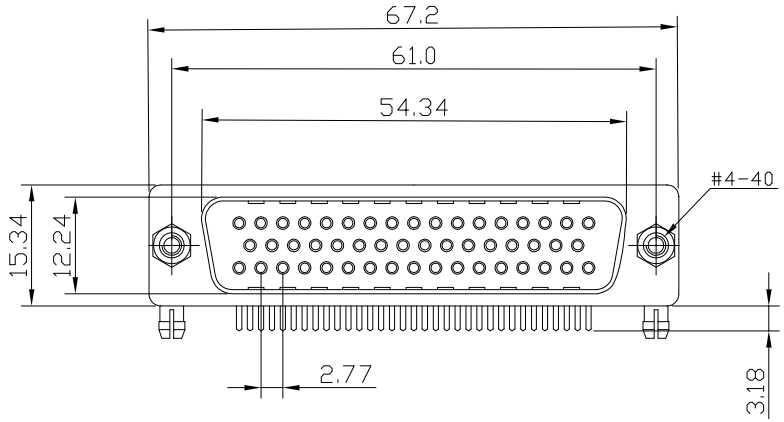

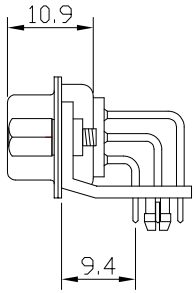

Voltage Current Rating:5 AMP.
Dielectric Withstanding Voltage:1000V AC
Insulation Resistance:5000MΩ Min.
Temperature Range:-55℃ to +85℃

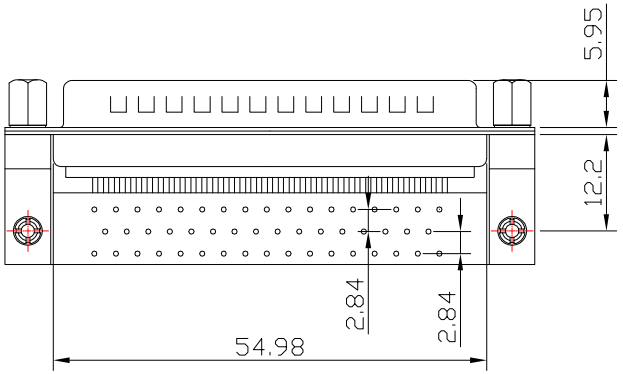

PART NO:
B05-0505X14D-02

HOUSING COLOR:
1 = BLACK
5 = WHITE

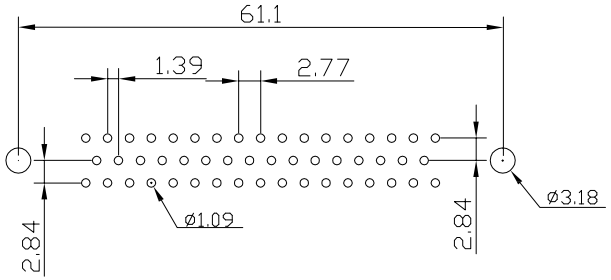

ITEM	DESC.	MATERIAL	REMAKS	PART REMAKS
5	SCREW	STEEL	PALTING:Ni	
4	BOARDLOCK	COPPER ALLOY	PALTING:Ni	
3	HOUSING	PBT+30%GF	COLOR:BLACK	
2	SHELL	SPCC	PALTING:Ni	
1	TERMINAL	COPPER ALLOY	CONTACT AREA:Au 2u" SOLDER AREA:Au 2u" UNDER-PLATING:Ni	

NAME:	D-SUB 50P 车针公头90度插板9.4折弯铆支架鱼叉锁螺丝	PART NO.	B05-0505X14D-02

SIDE	DATE	DESCRIPTION	APPROVER
A	2011/06/14	NEW ISSUE	JINGLI

QUALITY SYMBOLS
□: CRITICAL
⊠: MAJOR
▽: ZERO DEFECT
▽: S.P.C

Toleance	
x.	±0.50
.x	±0.30
.xx	±0.25

REV:	A	UNIT:	mm	DRW BY	CHK BY	APP BY	DRAWING NO.
SCALE:	N:1	DATE:	2011/06/14	JINGLI	KING ZHOU		B04-011

KinKuo 东莞市箐国电子有限公司
www.KinKuo.com