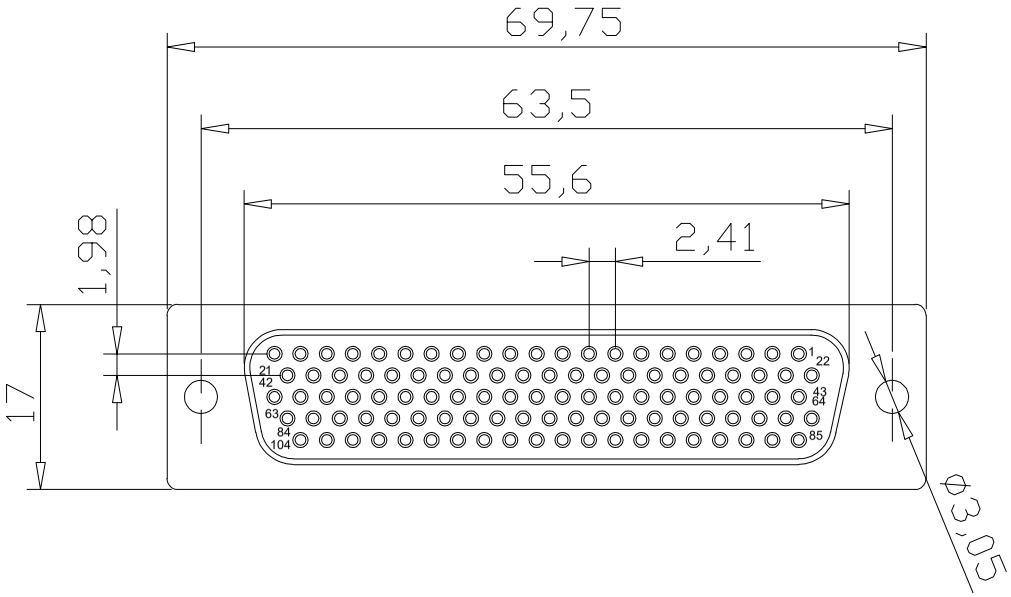

Voltage Current Rating:5 AMP.
Dielectric Withstanding Voltage:1000V AC
Insulation Resistance:1000MΩ Min.
Temperature Range:-25℃ to +85℃

PART NO:
B04-1044X14N-02

HOUSING COLOR:
1 = BLACK
5 = WHITE

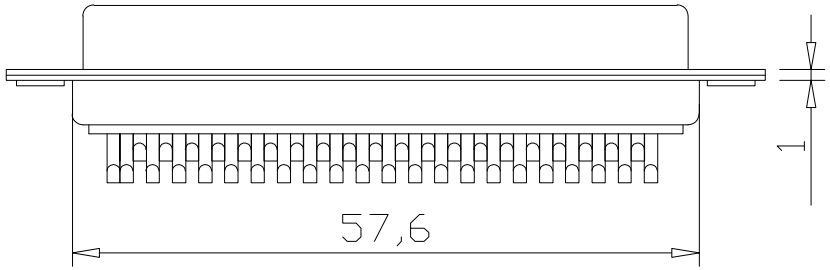

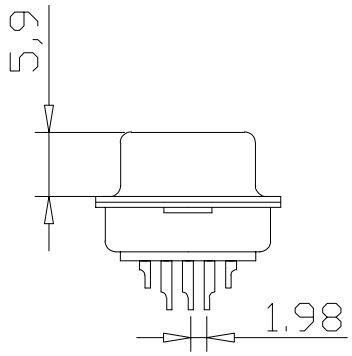

ITEM	DESC.	MATERIAL	REMAKS	PART REMAKS
4	REAR SHELL	SPCC	PALTING:Sn	
3	FRONT SHELL	SPCC	PALTING:Ni	
2	HOUSING	PBT+30%GF	COLOR:SEE PART NO.	
1	TERMINAL	COPPER ALLOY	TERMINAL FINISH:FULL GOLD FINISHED 2u"	

SIDE	DATE	DESCRIPTION	APPROVER
⚠	2014/07/10	NEW ISSUE	JINGLI

QUALITY SYMBOLS
□: CRITICAL
⊠: MAJOR
▽: ZERO DEFECT
▽c: S.P.C

Toleance	
x.	±0.50
.x	±0.30
.xx	±0.25

NAME:	HD.D-SUB 104P 车针母头焊线式 (客户用图)				PART NO.	B04-1044X14N-02	
REV:	A	UNIT:	mm	DRW BY	CHK BY	APP BY	DRAWING NO.
SCALE:	N:1	DATE:	2014/07/10	JINGLI	KING ZHOU		B04-022

东莞市箐国电子有限公司