RoHS COMPLIANT

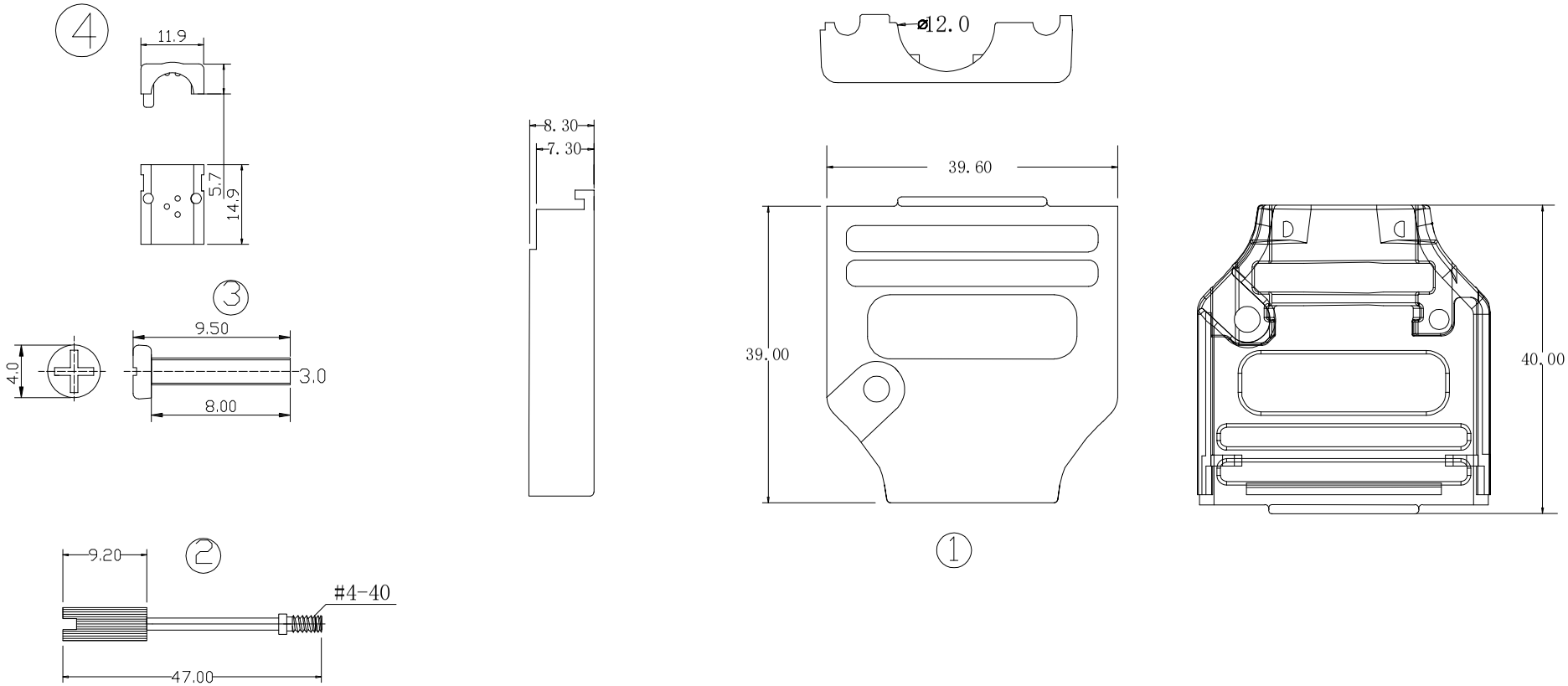

PART NO.:
B05-015NN8N9-XXC

ENTRY HOLE SIZES:
60:OD 6.0mm
80:OD 8.0mm
1A:OD 10.0mm
1C:OD 12.0mm

ITEM	DESC.	MATERIAL	REMAKS	PART REMAKS
4	黑色线卡	ABS	COLOR:BLACK	1SET
3	全牙螺丝	STEEL	PLATING:Ni	2PCS
2	螺丝#4-40 UNC	STEEL	PLATING:Zn	2PCS
1	上下外壳	ZINC	PLATING:Ni	1SET

SIDE	DATE	DESCRIPTION	APPROVER
A	2013/04/08	新版发行	JACK CHEN

QUALITY SYMBOLS
□: CRITICAL ⊠: MAJOR
▽: ZERO DEFECT ▽: S.P.C

Toleance	
x.	±0.80
.x	±0.50
.xx	±0.25

NAME:	D-SUB 15P ZINC Hood HD Type			PART NO.	B05-015NN8N9-XXC		
REV:	A	UNIT:	mm	DRW BY	CHK BY	APP BY	DRAWING NO.
SCALE:	N:1	DATE:	2013/04/08	JING LI	JACK CHEN		B05-051

东莞市箐国电子有限公司