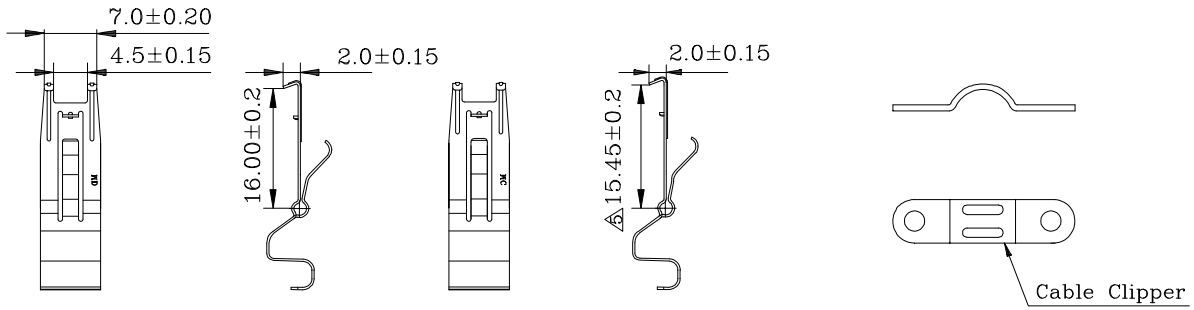

<HPDB> <HPCN>

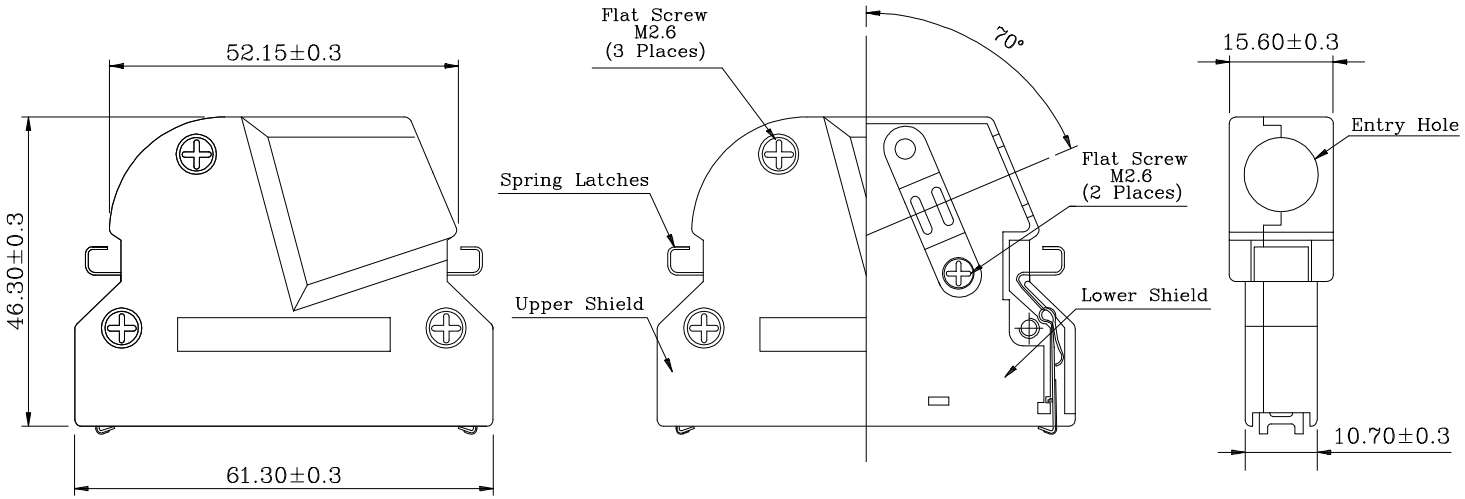

- PART NO.:

BXX-068NN8NH-XX

SPECIFICATION:
02:HPCN
03:HPDB

ENTRY HOLE SIZES:
90:9.0mm
1B:11.0mm

ITEM	DESC.	MATERIAL	REMAKS	PART REMAKS
4	CABLE CLIPPER	STEEL	PLATING:Ni	
3	FLAT SCRWE	STEEL	PLATING:Ni	
2	SPRING LATCH	STAINLESS STEEL		
1	BACKSHELL	ZINC ALLOY	PLATING:Ni	

SIDE	DATE	DESCRIPTION	APPROVER
3			
2			
1	2012/07/23	新版发行	King Zhou

QUALITY SYMBOLS
□: CRITICAL
⊠: MAJOR
▽: ZERO DEFECT
▽: S.P.C

Toleance	
x.	±0.80
.x	±0.50
.xx	±0.30

NAME:	SCSI-68P ZINC Metal Hood With Latch (Out Cable From Side)			PART NO.	BXX-068NN8NH-X0		
REV:	A	UNIT:	mm	DRW BY	CHK BY	APP BY	DRAWING NO.
SCALE:	N:1	DATE:	2012/07/23	JACK CHEN	DEAN FAN		BXX-A10

东莞市箐国电子有限公司