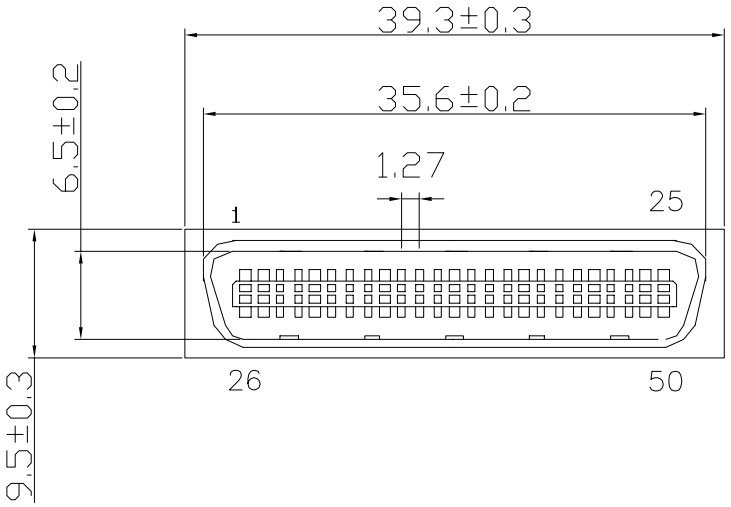

Contact Currect Rating: 0.5 Amp
Dielectric Withstanding Voltage: 500V AC/Min
Insulation Resistance: 500MΩ/Min
Contact Resistance: 35mΩ/Max
Operaion Temperature: −45°C ~ +85°C

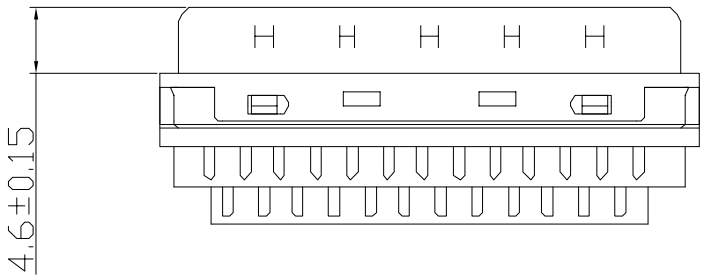

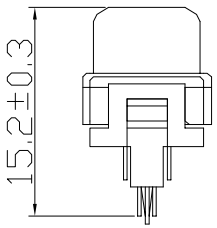

ITEM	DESC.	MATERIAL	REMAKS	PART REMAKS
4	COVER	PBT+30%G.F. (UL 94V-0)	COLOR: BLACK	
3	HOUSING	PBT+30%G.F. (UL 94V-0)	COLOR: BLACK	
2	SHELL	SPCC (t=0.50mm)	Ni Plating	
1	TERMINAL	PHOSPHOR BRONZE(t=0.25mm)	CONTACT AREA: Au 5u" SOLDER AREA: Sn 100u" UNDER-PLATING: Ni 50u"	

SIDE	DATE	DESCRIPTION	APPROVER
3			
2			
1	2021/06/15	新版发行	King Zhou

QUALITY SYMBOLS
□: CRITICAL
⊠: MAJOR
▽: ZERO DEFECT
▽: S.P.C

Toleance	
x.	±0.50
.x	±0.30
.xx	±0.15

NAME:	SCSI-II 100P Male Solder Type				PART NO.	B03-050311E0-01	
REV:	B	UNIT:	mm	DRW BY	CHK BY	APP BY	DRAWING NO.
SCALE:	N:1	DATE:	2021/06/15	DAWN HU	KING ZHOU		B03-0503

东莞市箐国电子有限公司

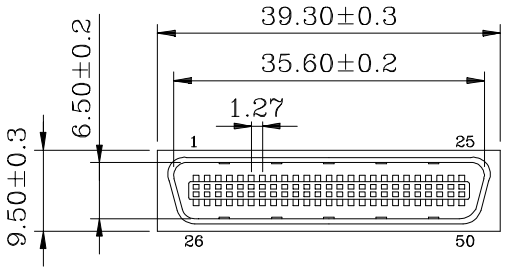

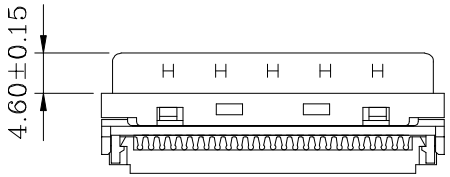

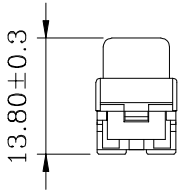

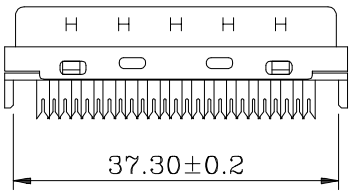

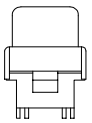

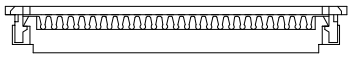

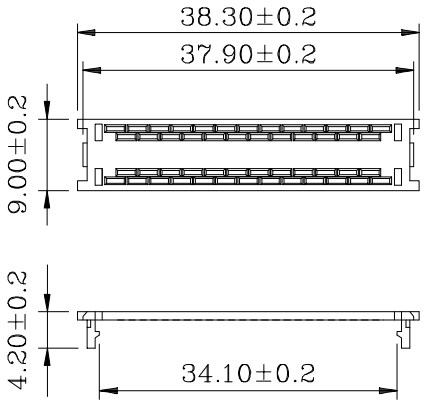

Termination Cover
(1 Places)

Contact Currect Rating: 0.5 Amp
Dielectric Withstanding Voltage: 500V AC/Min
Insulation Resistance: 500MΩ/Min
Contact Resistance: 35mΩ/Max
Operaion Temperature: −45°C ~ +85°C

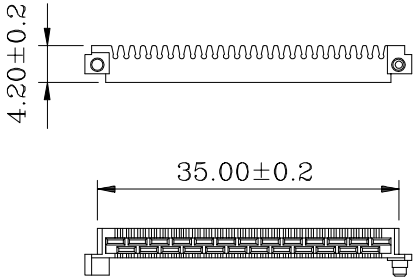

Wire Holder
(2 Places)

PART NO: B03−050111E0−X0

WIRE HOLDER:
28AWG or 30AWG WIRE
6= 0.62mm
7= 0.75mm
9= 0.90mm

ITEM	DESC.	MATERIAL	REMAKS	PART REMAKS
4	COVER	PBT+30%G.F. (UL 94V−0)	COLOR: BLACK	
3	HOUSING	PBT+30%G.F. (UL 94V−0)	COLOR: BLACK	
2	SHELL	SPCC (t=0.50mm)	Ni Plating	
1	TERMINAL	PHOSPHOR BRONZE(t=0.25mm)	CONTACT AREA: Au 5u" SOLDER AREA: Sn 100u" UNDER−PLATING: Ni 50u"	

SIDE	DATE	DESCRIPTION	APPROVER
3			
2			
1	2021/06/15	新版发行	King Zhou

QUALITY SYMBOLS
□: CRITICAL
⊠: MAJOR
▽: ZERO DEFECT
▽: S.P.C

Toleance	
x.	±0.50
.x	±0.30
.xx	±0.15

NAME:	SCSI 50P Male IDC Type For Cable				PART NO.	B03−050111E0−01	
REV:	B	UNIT:	mm	DRW BY	CHK BY	APP BY	DRAWING NO.
SCALE:	N:1	DATE:	2021/06/15	DAWN HU	KING ZHOU		B03−0503

东莞市箐国电子有限公司

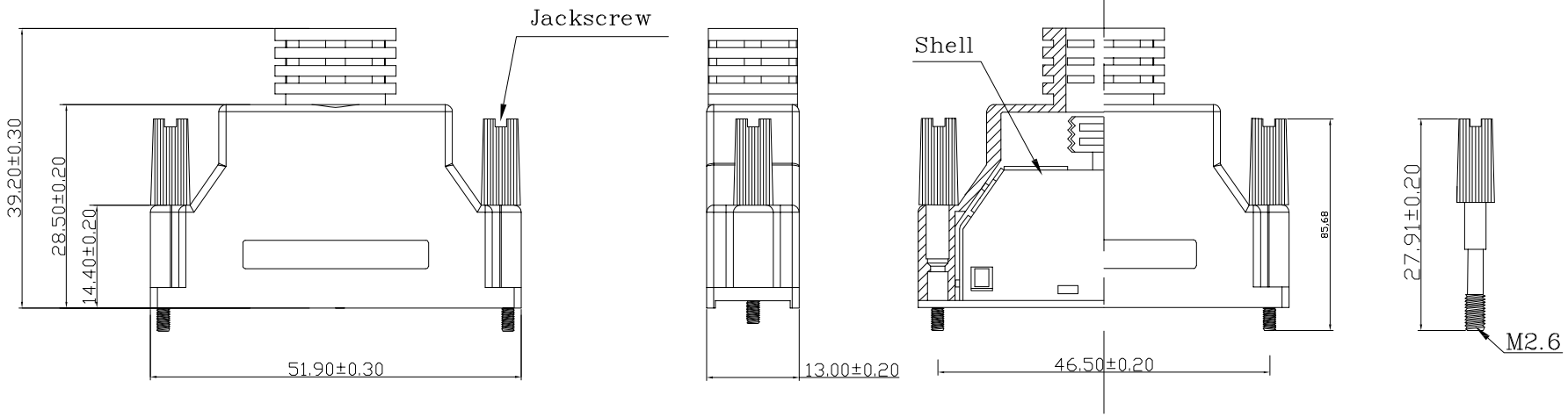

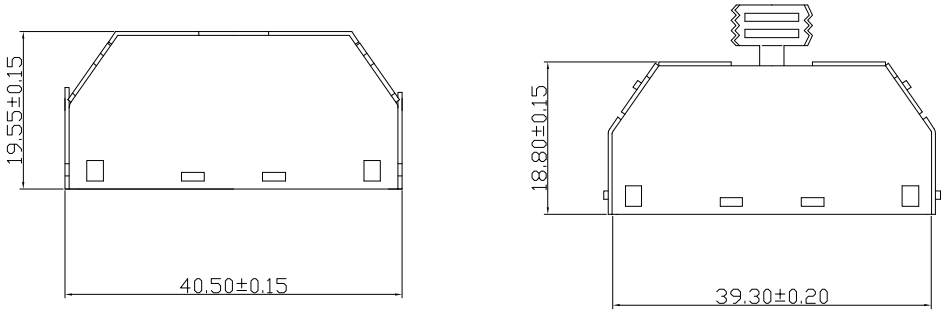

Contact Currect Rating: 1 Amp
Dielectric Withstanding Voltage: 500V AC/Min
Insulation Resistance: 500MΩ/Min
Contact Resistance: 35mΩ/Max
Operaion Temperature: −45°C ~ +85°C

PART NO:

B03−050N11NX− X1

JACKSCREWS:
7= M2.6
8= 2-56#
9= 4-40#

ENTRY HOLE SIZES:
9 = (⊡D 9.0mm)
A = (⊡D 10.5mm)

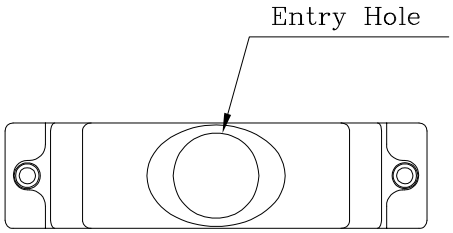

ITEM	DESC.	MATERIAL	REMAKS	PART REMAKS
1	COVER	ABS+30%G.F. (UL 94V-0)	COLOR:BLACK	
2	SCREW	STEEL	Ni Plating	
3	SHELL	SPCC (t=0.50mm)	Ni Plating	

SIDE	DATE	DESCRIPTION	APPROVER
3			
2			
1	2021/06/15	新版发行	King Zhou

QUALITY SYMBOLS
□: CRITICAL ⊠: MAJOR
▽: ZERO DEFECT ▽: S.P.C

Toleance	
x.	±0.50
.x	±0.30
.xx	±0.15

NAME:	SCS 50P Male ABS Hood For Cable				PART NO.	B03-050N11NX-X1	
REV:	B	UNIT:	mm	DRW BY	CHK BY	APP BY	DRAWING NO.
SCALE:	N:1	DATE:	2021/06/15	DAWN HU	KING ZHOU		B02-1003

东莞市箐国电子有限公司