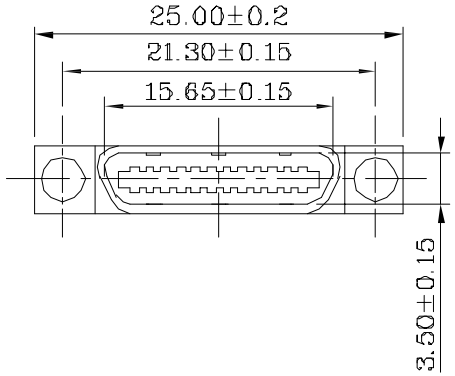

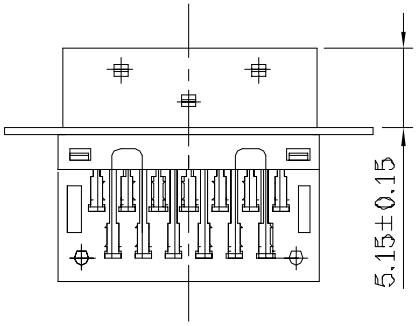

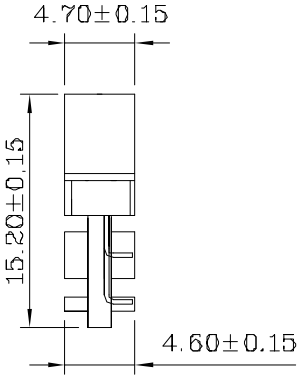

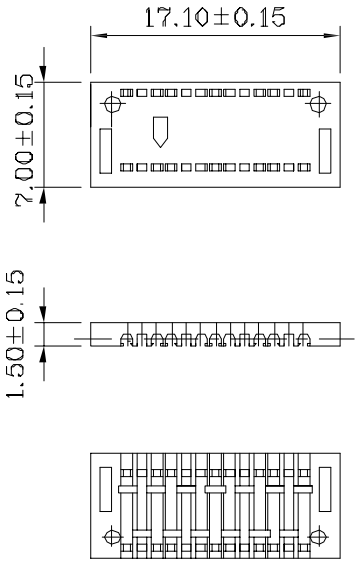

Termination Cover
(2 Places)

- Current Rating: 1 Amp
- Insulation Resistance: 500MΩ/Min
- Withstanding Voltage: 500V AC/Min
- Contact Resistance: 35mΩ Max
- Temperature Range: −25°C ~ +85°C

ITEM	DESC.	MATERIAL	REMAKS	PART REMAKS
3	HOUSING	LCP+30%GF	COLOR:BEIGE	
2	SHELL	SPCC	PLATING:Ni	
1	TERMINAL	COPPER ALLOY T=0.3mm	CONTACT AREA:G/F SOLDER AREA:Sn UNDER-PLATING:Ni	

SIDE	DATE	DESCRIPTION	APPROVER
A	2020/09/23	NEW ISSUE	JACK CHEN

QUALITY SYMBOLS

□:	⊠:
CRITICAL	MAJOR
▽:	▽:
ZERO DEFECT	S.P.C

Toleance	
X.	±0.50
.X	±0.30
.XX	±0.25

NAME:	CISCO 26P PITCH 1.0mm MALE IDC TYPE				PART NO.	B06-0261C1EN-01	
REV:	B	UNIT:	mm	DRW BY	CHK BY	APP BY	DRAWING NO.
SCALE:	N:1	DATE:	2020/09/23	JACK CHEN	KING ZHOU		B06-012

东莞市箐国电子有限公司