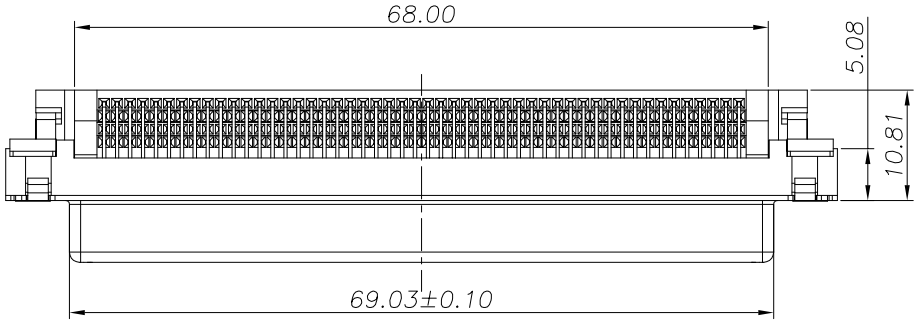

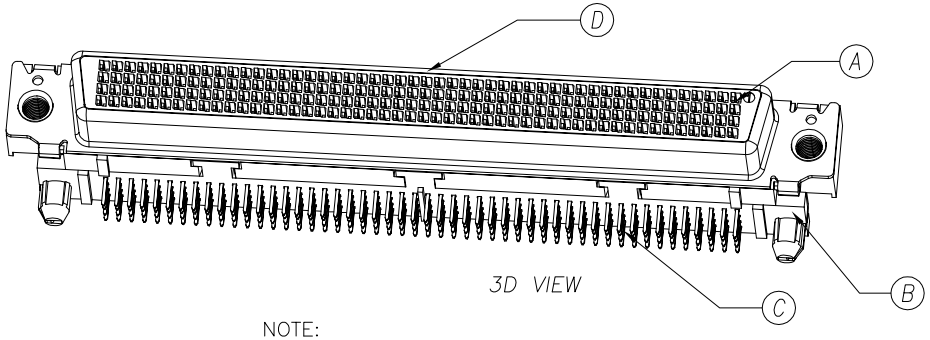

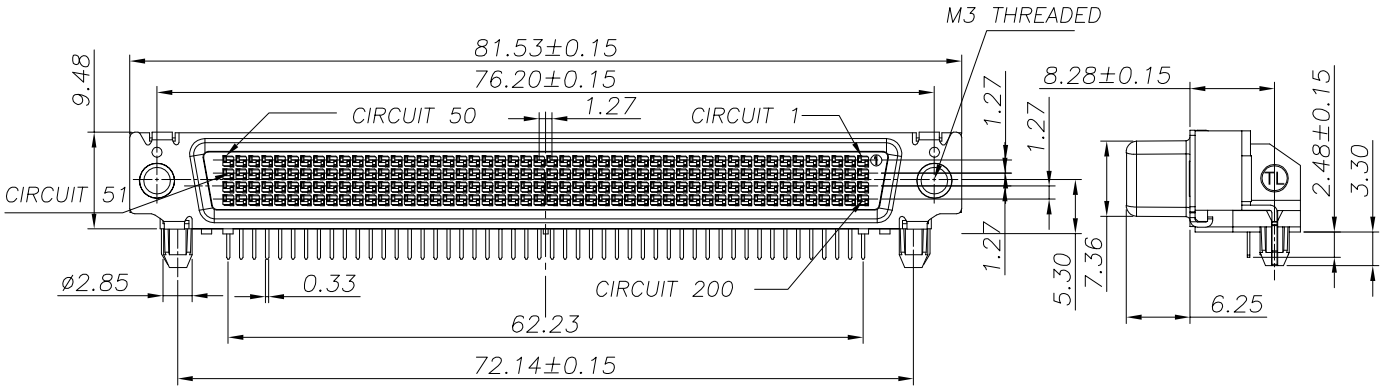

NOTE:

1.MATERIALS:

1. HOUSING: THERMOPLASTIC, LCP UL 94V-0 RATED.
2. COVER: THERMOPLASTIC, LCP UL 94V-0 RATED.
3. CONTACTS: COPPER ALLOY, 15u" Gold on mating area. 80u" Tin on the tails.
4. SHELL: SPCC, NICKEL PLATED.
5. HARPOON: COPPER ALLOY, TIN OVER NICKEL

2.SPECIFICATION:

1. RATED CURRENT: 0.30A/CONTACT
2. INSULATION RESISTACE: 500MOHM MIN.
3. DIELECTRIC WITHSTANDING VOLTAGE:250V AC FOR 1MINUTE.
4. OPERATING TEMPERATURE: -25°C TO +85°C

3.ROHS COMPLIANT.

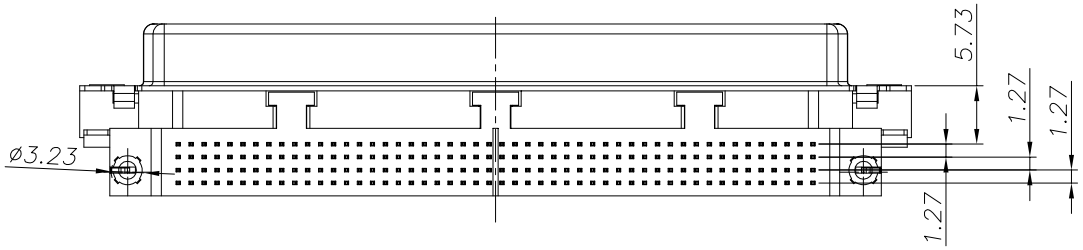

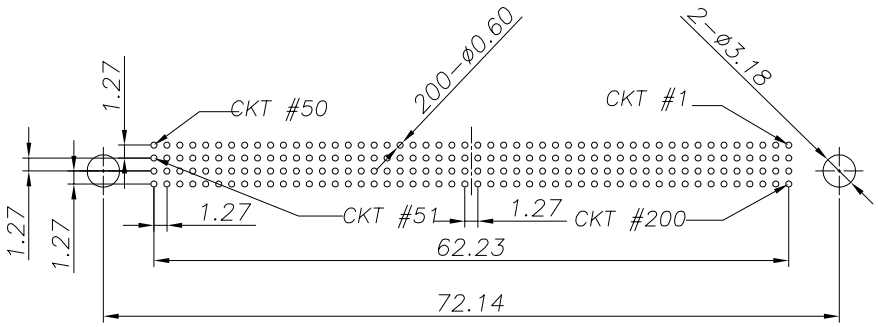

Recommended P.C.B Layout

⚠	2023/03/20	NEW ISSUE	Jack Chen
SIDE	DATE	DESCRIPTION	APPROVER

QUALITY SYMBOLS

□: CRITICAL ⊠: MAJOR

▽: ZERO DEFECT ▽: S.P.C

Toleance

x.	±0.60
.x	±0.40
.xx	±0.25

PART NAME:	LFH-200P Female Connector R/A DIP Type				PART NO:	71718-2000-TL	
REV:	A	UNIT:	mm	DRW BY	CHK BY	APP BY	DRAWING NO.
SCALE:	N:1	DATE:	2023/03/20	Huangmei	Jack Chen		71718

KinKuo 东莞市箐国电子有限公司

www.KinKuo.com