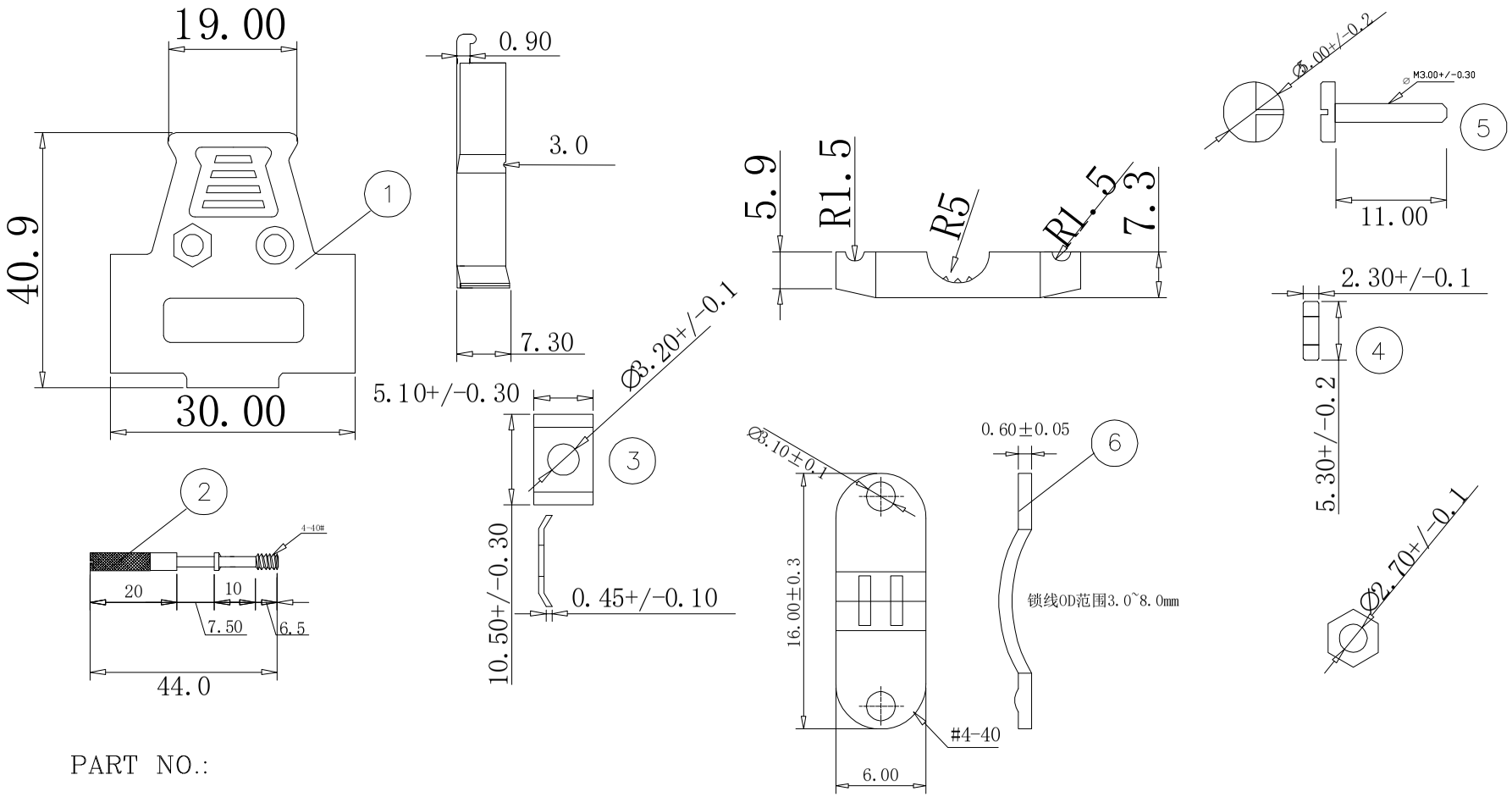

PART NO.:

B05-009NN8N9-XXB

ENTRY HOLE SIZE:

70: OD=7.0MM

90: OD=9.0MM

1A: OD=10.0MM

ITEM	DESC.	MATERIAL	REMAKS	PART REMAKS
5	#4*12.5mm螺杆	STEEL	PLATING:Ni	2PCS
4	固定螺母	STEEL	PLATING:Ni	2PCS
3	方形垫片	STEEL	PLATING:Ni	2PCS
2	螺丝#4-40 UNC	STEEL	PLATING:Ni	2PCS
1	上下外壳	ZINC	PLATING:SEE NOTE	1SET

SIDE	DATE	DESCRIPTION	APPROVER
3			
2			
1	2018/08/08	新版发行	King Zhou

QUALITY SYMBOLS

□: CRITICAL ⊠: MAJOR

▽: ZERO DEFECT ▽: S.P.C

Toleance

x. ±0.50

.x ±0.30

.xx ±0.15

NAME:	D-SUB 9P锌合金外壳 长螺丝 (客户用图)			PART NO.	B05-009NN8N9-XXB		
REV:	A	UNIT:	mm	DRW BY	CHK BY	APP BY	DRAWING NO.
SCALE:	N:1	DATE:	2018/08/08	DAW NHU	KING ZHOU		505A-001

东莞市箐国电子有限公司