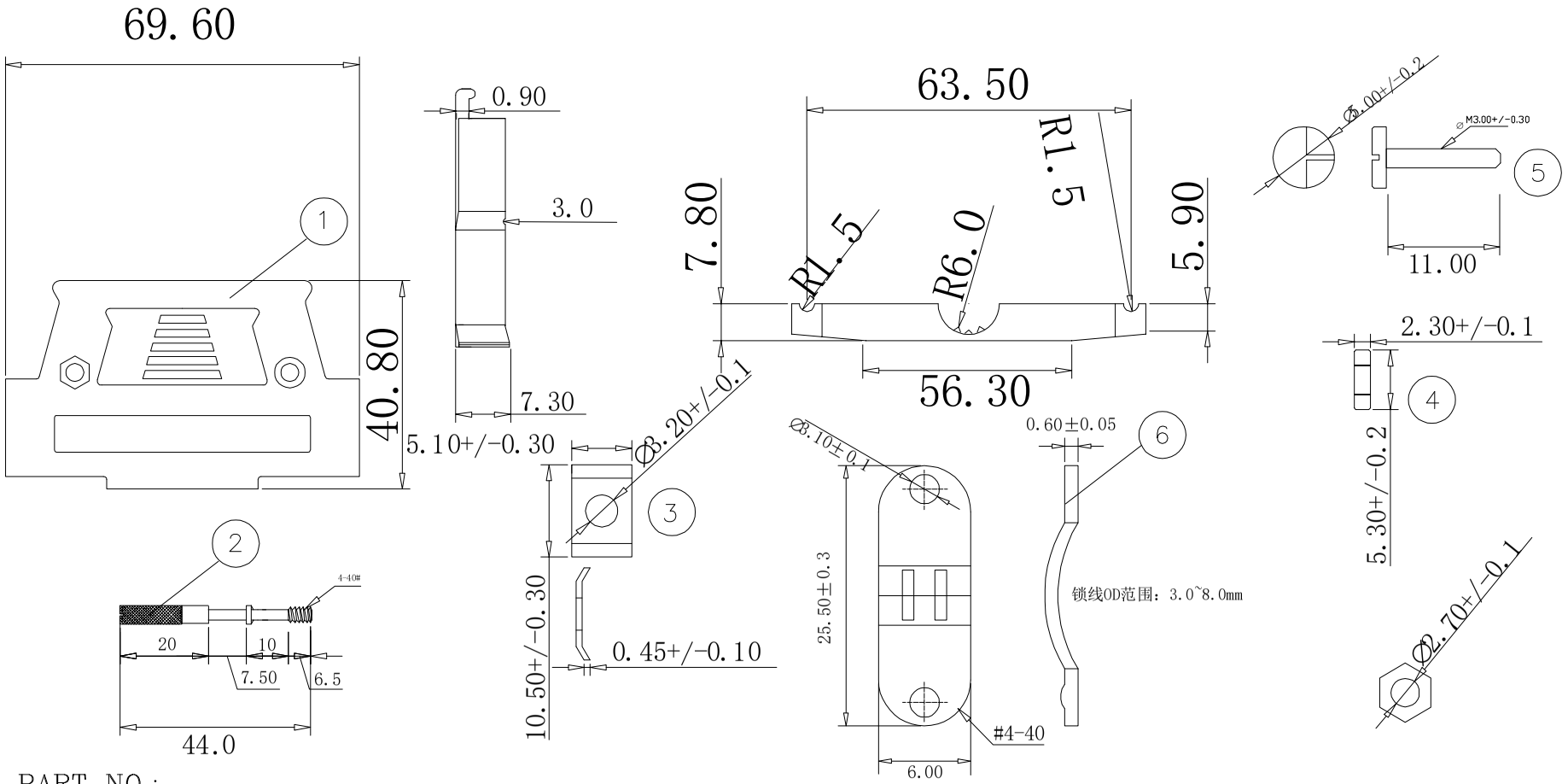

PART NO.:

B05-037NN8N9-XXB

ENTRY HOLE SIZE:

60: OD=6.0MM

70: OD=7.0MM

90: OD=9.0MM

ITEM	DESC.	MATERIAL	REMAKS	PART REMAKS
6	线夹	STEEL	PLATING:Ni	2PCS
5	#4*12.5mm螺杆	STEEL	PLATING:Ni	2PCS
4	固定螺母	STEEL	PLATING:Ni	2PCS
3	方形垫片	STEEL	PLATING:Ni	2PCS
2	螺丝#4-40 UNC	STEEL	PLATING:Ni	2PCS
1	上下外壳	ZINC	PLATING:SEE NOTE	1SET

SIDE	DATE	DESCRIPTION	APPROVER
3			
2			
1	2018/08/08	新版发行	King Zhou

QUALITY SYMBOLS: □: CRITICAL; ⊠: MAJOR; ▽: ZERO DEFECT; ▽: S.P.C

Toleance: x. ¡À0.50; .x ¡À0.30; .xx ±0.15

NAME:	D-SUB 37P锌合金外壳AMP 长螺丝			PART NO.	B05-037NN8N9-XXB	
REV:	A	UNIT:	mm	DRW BY	CHK BY	APP BY	DRAWING NO.
SCALE:	N:1	DATE:	2018/08/08	DAW NHU	KING ZHOU		505A-001

东莞市箐国电子有限公司