No.of Contact	A ±0.25	B ±0.13	C ±0.38	D ±0.25
09	16.92	24.99	30.81	19.28
15	25.25	33.32	39.14	27.51
25	38.96	47.04	53.04	41.28
37	55.24	63.50	69.32	57.71

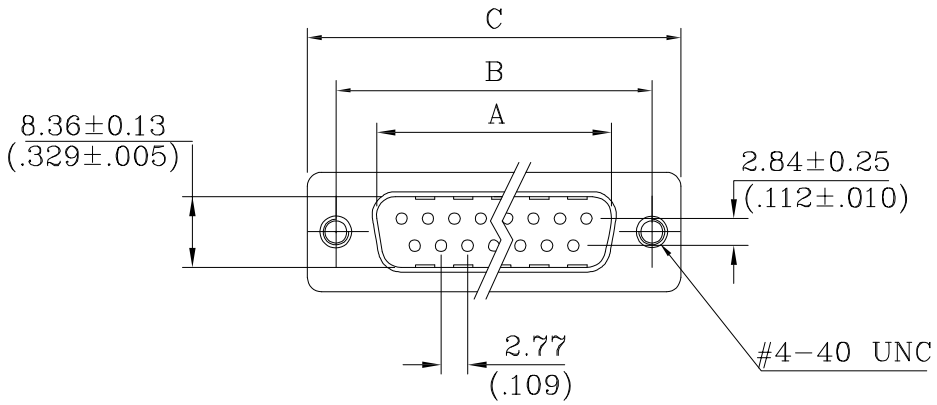

Voltage Current Rating:5 AMP.
Dielectric Withstanding Voltage:1000V AC
Contact Resistance:30 mΩ Max.
Insulation Resistance:5000MΩ Min.
Temperature Range:-55℃ to +85℃

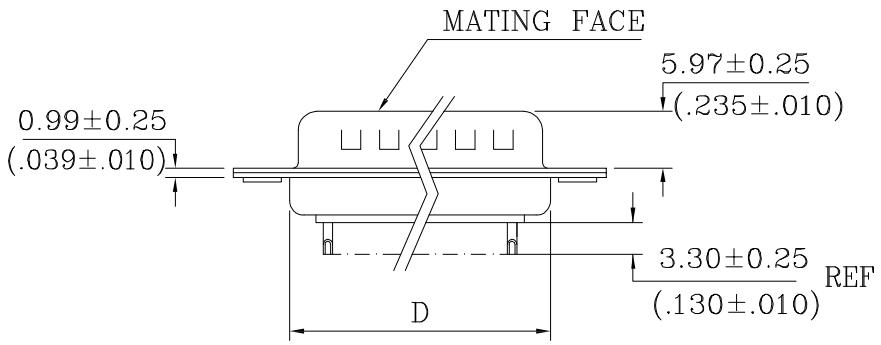

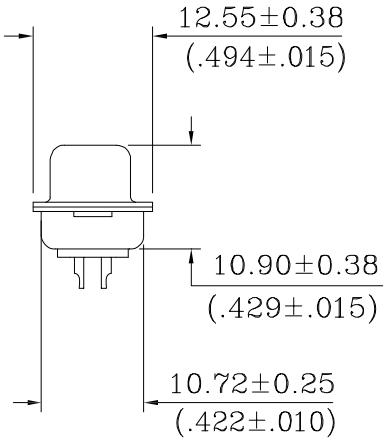

PART NO.:
B05-0XX3X14N-02

NO.OF CONTACT:
09: 9P
15: 15P
25: 25P
37: 37P

HOUSING COLOR:
1= BLACK
5= WHITE

SIDE	DATE	DESCRIPTION	APPROVER
3			
2			
1			

QUALITY SYMBOLS
□: CRITICAL
⊠: MAJOR
▽: ZERO DEFECT
▽: S.P.C

Toleance	
X.	±0.50
.X	±0.30
.XX	±0.30

NAME:	D-SUB Machined Pin Solder Type Straight				PART NO.	B05-0XX3X14N-02	
REV:	A	UNIT:	mm	DRW BY	CHK BY	APP BY	DRAWING NO.
SCALE:	NONE	DATE:	2022/05/12	DAW NHU	KING ZHOU		B05-014

东莞市箐国电子有限公司