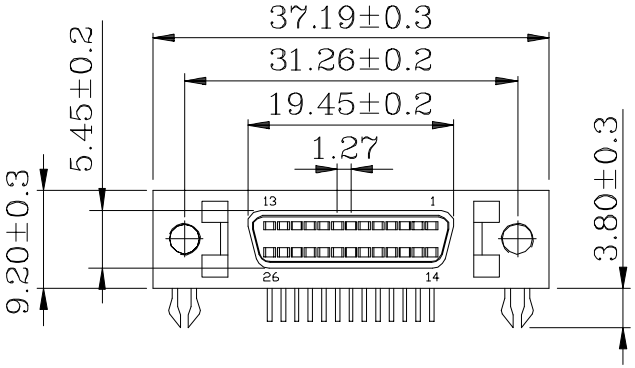

- Current Rating: 1 Amp
- Insulation Resistance: 500MΩ/Min
- Withstanding Voltage: 500V AC/Min
- Contact Resistance: 35mΩ Max
- Temperature Range: −25°C ~ +85°C

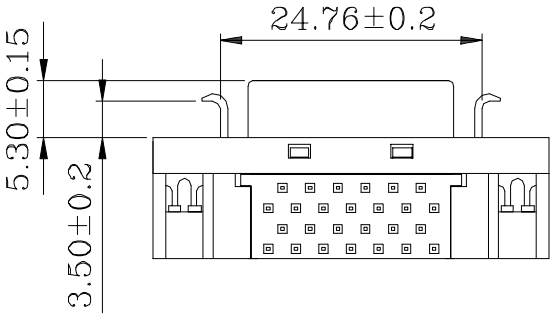

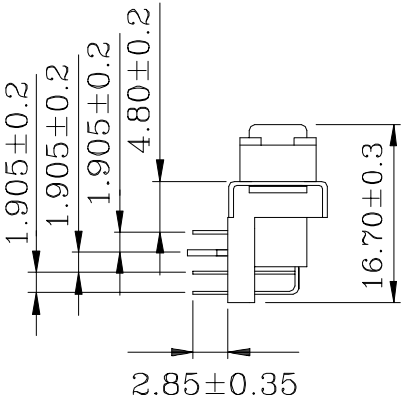

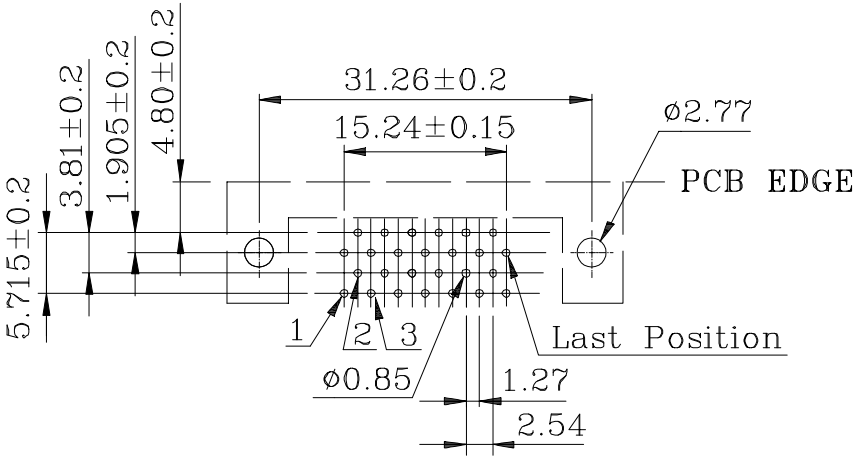

PCB Layout (A)

ITEM	DESC.	MATERIAL	REMAKS	PART REMAKS
6	BOARDLOCK	COPPER ALLOY	PLATING:Tin	
5	BRACKET	SPCC	PLATING:Ni	
4	COVER	PBT+30%GF	COLOR:BLACK	
3	HOUSING	PBT+30%GF	COLOR:BLACK	
2	SHELL	SPCC	PLATING:Ni	
1	TERMINAL	PHOSPHOR BRONZE	CONTACT AREA:Au 5u" SOLDER AREA:Sn UNDER-PLATING:Ni	

SIDE	DATE	DESCRIPTION	APPROVER
A	2012/08/05	NEW ISSUE	JINGLI

QUALITY SYMBOLS
□: CRITICAL ⊠: MAJOR
▽: ZERO DEFECT ▽: S.P.C

Toleance	
x.	±0.50
.x	±0.30
.xx	±0.25

NAME:	SCSI-II 26Pin Female R/A DIP Type			PART NO.	B02-026611EC-1S	
REV:	A	UNIT:	mm	DRW BY	CHK BY	APP BY	DRAWING NO.
SCALE:	N:1	DATE:	2012/08/05	JINGLI	KING ZHOU		B02-005

东莞市箐国电子有限公司