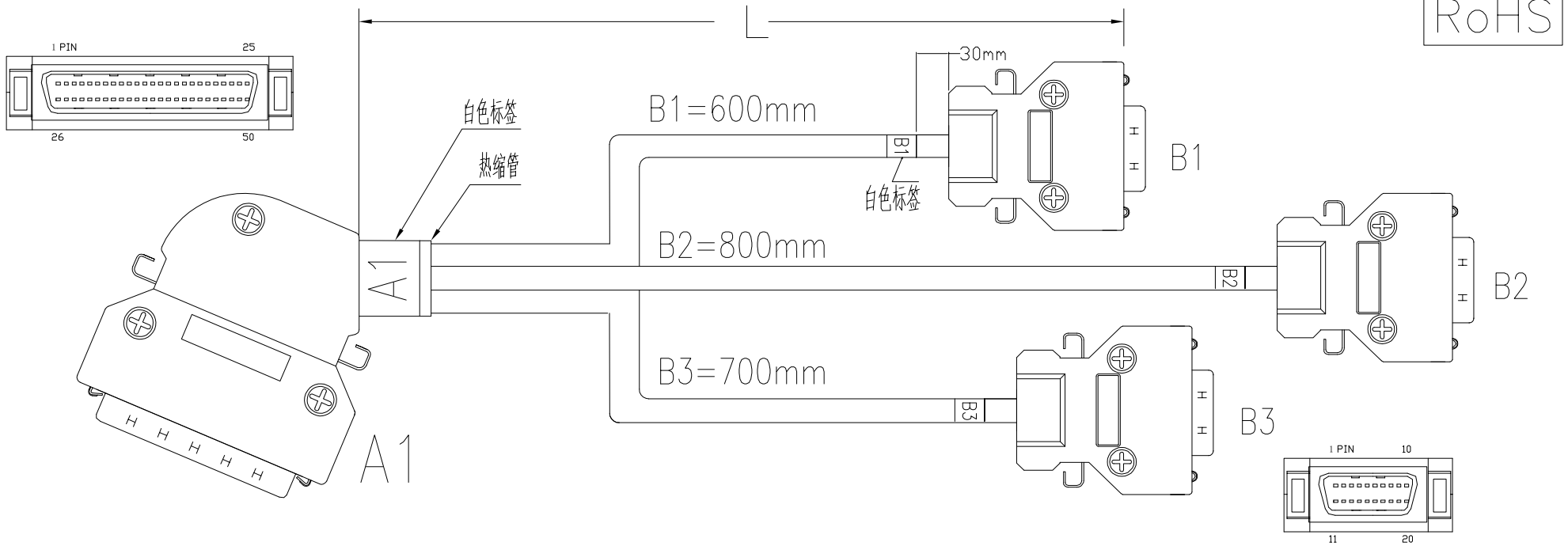

PIN ASSIGNMENT

A1	1	2	3	4	5	6	7	8	9	10	11	12	13	14	15	16	17	18	19	20	21	22	23	24	25	26	27	28	29	30	31	32	33	34	35	36	37	38	39	40	41	42	43	44	45	46	47	48	49	50
B1	8	9	6	7										4	5	2	3									19	18	17	16										15	14	13	12								
B2					8	9	6	7										4	5	2	3									19	18	17	16										15	14	13	12				
B3									8	9	6	7										4	5	2	3									19	18	17	16										15	14	13	12

B1 B2 B3(PIN1,PIN10,PIN11,P20)+Shell TO SHIELD

B1 B2 B3(PIN1,PIN10,PIN11,P20)+Shell TO SHIELD

(a) OPEN/SHORT/INTERMITTENCE:100% TEST
(b) HI-HOP TEST:AC 100V/1MIN
(c) INSULATION RESISTANCE:DC 150V/10MΩ
(d) CONNACT RESISTANCE: 30mΩ .(MAX)
(e) CONDUCTIVE RESISTANCE:3Ω .(MAX)

ITEM	PART NAME	DESCRIPTION	QY'T
3	CABLE	UL20276 8P*28AWG+AL.Mylar+Drain +Braid PVC JACKET COLOR:BLACK OD=5.0mm	3PCS
2	CONNECTOR	HPDB SCSI 20Pin Male ASS'Y TYPE	3SET
1	CONNECTOR	HPDB SCSI 50Pin Male ASS'Y TYPE	1SET

APPROVED	CHECKED	DESIGN	DRAWN	PART NO.	FC-DB50A26-03A	SHT	1/1
				DESCRIPTION	SCSI-II 50P to 3x20P Cable		
				DRAWING NO.		REV	A

UNIT	SCALE	TOLERANCES
mm	2:1	DIM. ±0.10 ANGLE: ±1°

QUALITY SYMBOLS
■: CRITICAL ⊠: MAJOR
ZERO DEFECT S.P.C

REV	DESCRIPTION	DATE
A	图面发行	2021-08-03

东莞市箐国电子有限公司

THIS DRAWING CONTAINS INFORMATION THAT IS PROPRIETARY TO KinKuo
INCORPORATED AND SHOULD NOT BE USED WITHOUT WRITTEN REMISSION.