RoHS

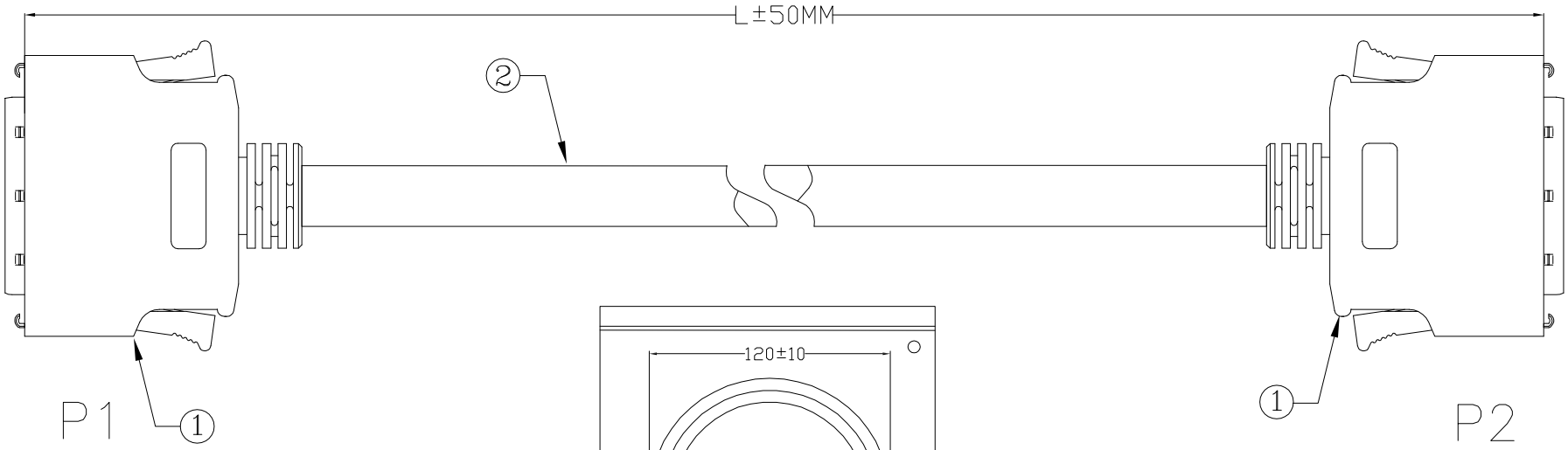

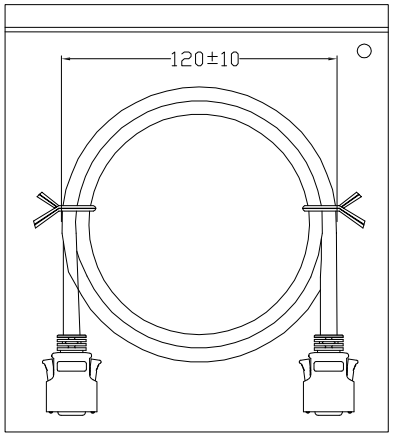

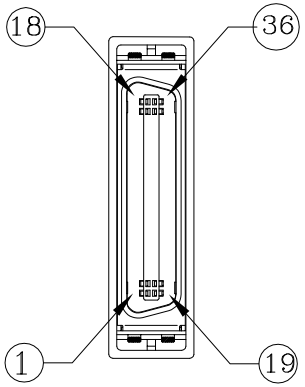

	Part NO	LENGTH	REMARK
1	FC-DC36-01A	L=1000MM	
2	FC-DC36-02A	L=1500MM	
3	FC-DC36-03A	L=2000MM	
4	FC-DC36-04A	L=3000MM	
5	FC-DC36-05A	L=5000MM	

PIN ASSIGNMENT

P1	SIGNAL	P2
1		1
2		2
3		3
4~33		4~33
34		34
35		35
36		36
Shell		Shell

NOTES:
1. ELECTRICAL TEST: 100% OPEN, SHORT & MISS WIRE TEST.
2. CONDUCTOR RESISTANCE: 5 OHMS MAX.
3. INSULATOR RESISTANCE: 1M OHMS MIN, DC 300V 0.01sec.
4. THIS PRODUCT MEET ROHS STANDARD ENVIRONMENTAL PROTECTION POLICY.

ITEM	PART NAME	DESCRIPTION	QY'T
2	CABLE	UL20276 28AWG*18P+AL+BRAID PVC JACKET COLOR:BLACK OD= 8.0mm	1PCS
1	CONNECTOR	HPCN SCSI 36Pin Male ASS'Y TYPE	2SET

REV	DESCRIPTION	DATE
A	图面发行	2020-05-22

QUALITY SYMBOLS
■: CRITICAL ⊠: MAJOR
▽: ZERO DEFECT ▽: S.P.C

UNIT	SCALE	TOLERANCES
mm	2:1	DIM. ±0.10 ANGLE: ±1°

东莞市箐国电子有限公司

APPROVED	CHECKED	DESIGN	DRAWN	PART NO.	FC-DC36-XXA	SHT	1/1
				DESCRIPTION	SCSI MDR 36P CABLE		
				DRAWING NO.		REV	C

THIS DRAWING CONTAINS INFORMATION THAT IS PROPRIETARY TO KinKuo
INCORPORATED AND SHOULD NOT BE USED WITHOUT WRITTEN REMISSION.