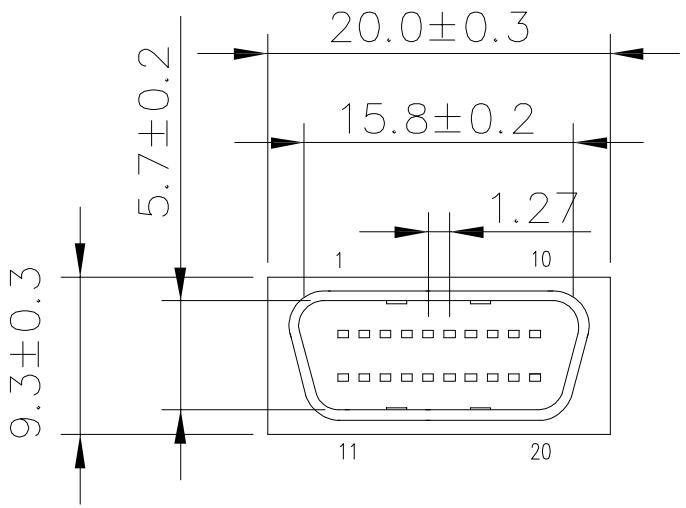

- **MATERIALS:(RoHS Compliant)**

Housing And Cover : Plastic thermoplastic P.B.T UL94V-0 black
Contacts : Phosphor bronze gold selective plated
Front Shell : Steel nickel plated over copper

- **ELECTRICAL CHARACTERISTICS**

Contact Currect Rating: 1 Amp
Dielectric Withstanding Voltage: 500V AC
Insulation Resistance: 500MΩ/Min
Contact Resistance: 35mΩ/Max
Operaion Temperature: −55°C ~ +105°C

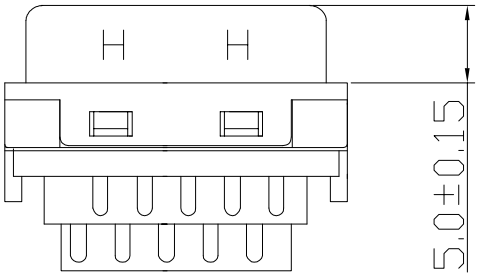

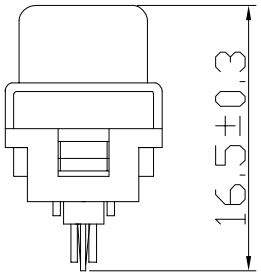

SIDE	DATE	DESCRIPTION	APPROVER
3		~~B02-020311E0-01~~	
2			
1	2015/07/16	新版发行	King Zhou

QUALITY SYMBOLS
□: CRITICAL ⊠: MAJOR
▽: ZERO DEFECT ▽: S.P.C

Toleance	
x.	±0.50
.x	±0.30
.xx	±0.15

NAME:	SCSI-II 20P Male Solder Type For Cable				PART NO.	B02-020311E0-01	
REV:	A	UNIT:	mm	DRW BY	CHK BY	APP BY	DRAWING NO.
SCALE:	N:1	DATE:	2015/07/16	DAW NHU	KING ZHOU		MDD-005

东莞市箐国电子有限公司

FEATURES:

- Plastic hood with spring latches
- Steel inner shell
- Full EMI/RFI shielded

MATERIALS:

- Hood: Plastic ABS Color:Black
- Inner Shell: Steel , Nickel plated
- Latch: Stanless steel

PART NO:

B02-020N11N X -X 1

LEATH FINISHES:

1= flag hook
2= fish hook

ENTRY HOLE SIZES:

6 = ø6.0
7 = ø7.0
8 = ø8.0

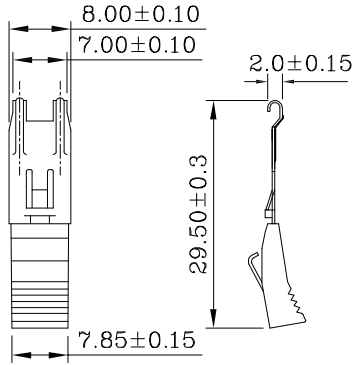

Fish Hooks

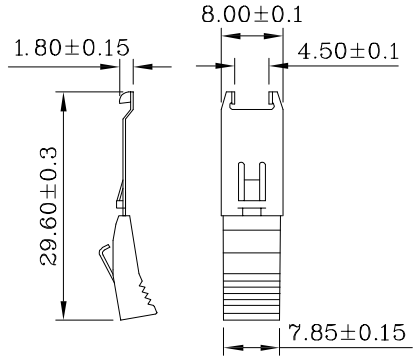

Flag Hooks

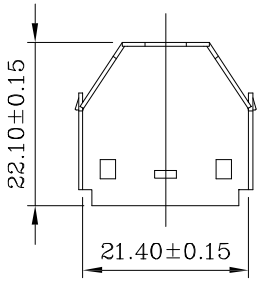

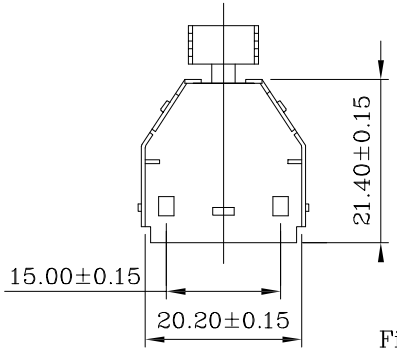

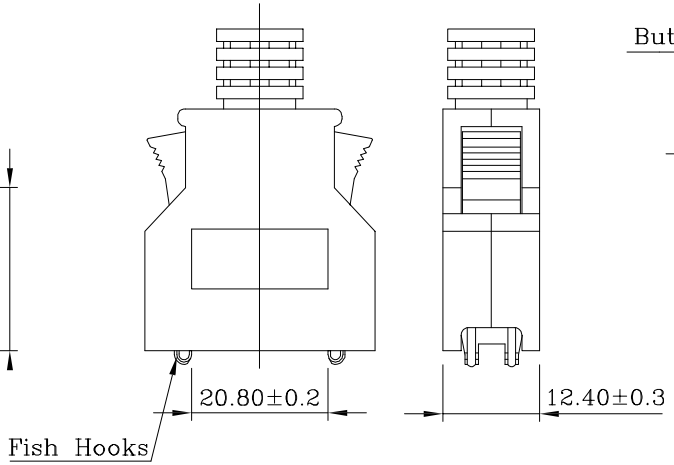

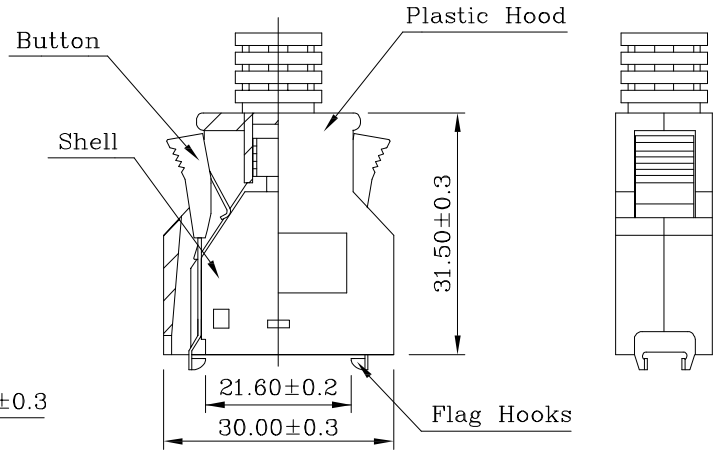

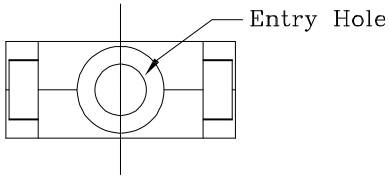

SIDE	DATE	DESCRIPTION	APPROVER
A			
B			
C	2015/07/16	新版发行	King Zhou

QUALITY SYMBOLS: □: CRITICAL; ⊠: MAJOR; ▽: ZERO DEFECT; ▽c: S.P.C

Toleance	
x.	±0.50
.x	±0.30
.xx	±0.15

NAME:	SCSI 20P Male ABS Hood Latch Type			PART NO.	B02-020N11NX-X1		
REV:	A	UNIT:	mm	DRW BY	CHK BY	APP BY	DRAWING NO.
SCALE:	N:1	DATE:	2015/07/16	DAW NHU	KING ZHOU		MDD-005

东莞市箐国电子有限公司