THIS DRAWING CONTAINS INFORMATION THAT IS PROPRIETARY TO KinKuo
INCORPORATED AND SHOULD NOT BE USED WITHOUT WRITTEN REMISSION.

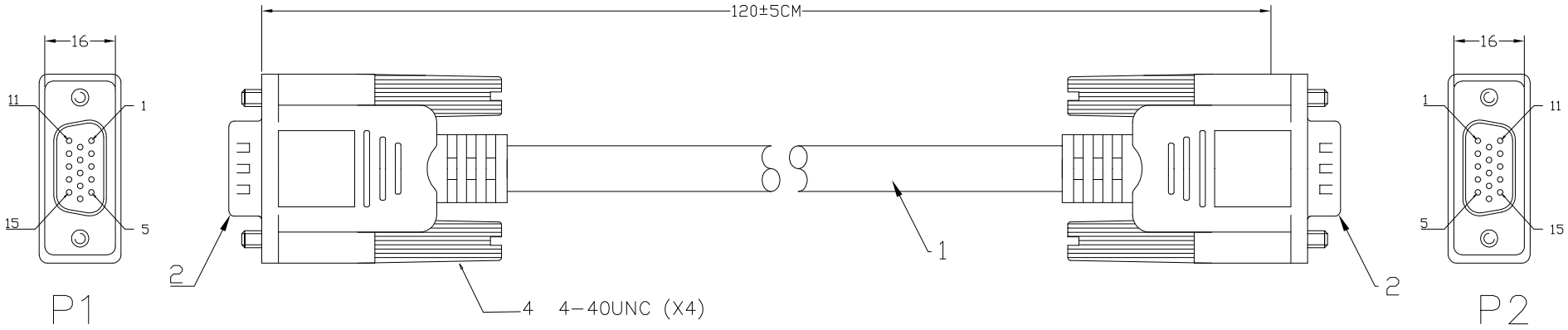

PIN ASSIGNMENT

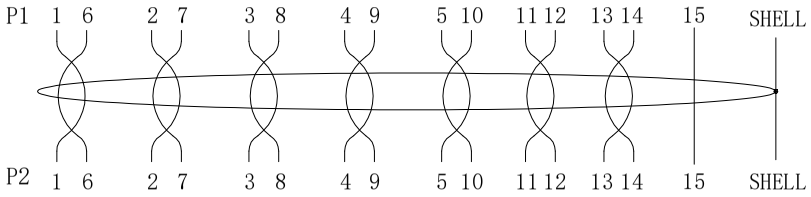

	Part NO	LENGTH	REMARK
1	FC-HDB015MM-01A	L=500MM	±15MM
2	FC-HDB015MM-02A	L=1000MM	±30MM
3	FC-HDB015MM-03A	L=2000MM	±35MM
4	FC-HDB015MM-04A	L=3000MM	±50MM
5	FC-HDB015MM-05A	L=5000MM	±80MM

NOTES:

1. ELECTRICAL TEST: 100% OPEN, SHORT & MISS WIRE TEST.
2. CONDUCTOR RESISTANCE: 5 OHMS MAX.
3. INSULATOR RESISTANCE: 1M OHMS MIN, DC 300V 0.01sec.
4. THIS PRODUCT MEET ROHS STANDARD ENVIRONMENTAL PROTECTION POLICY.

ITEM	PART NAME	DESCRIPTION	QY'T
4	Out-Mould	45P PVC BLACK	9
4	In-Mould	PE	9
3	SCREW	SCREW 4-40# BLACK NI	4PCS
2	CONNECTOR	H.D-SUB 15PIN MALE SOLDER TYPE	2 pcs
1	CABLE	UL2464 26AWG*7.5P PVC JACKET COLOR:BLACK OD= 6.5mm	1PCS

REV	DESCRIPTION	DATE
A	图面发行	2021-03-08

QUALITY SYMBOLS
■: CRITICAL ⊠: MAJOR
▽: ZERO DEFECT ▽: S.P.C

UNIT	SCALE	TOLERANCES
mm	2:1	DIM. ±0.10 ANGLE: ±1°

东莞市箐国电子有限公司

APPROVED	CHECKED	DESIGN	DRAWN	PART NO.	FC-HDB015MM-XXA	SHT	1/1
				DESCRIPTION	H.D-SUB 15P Male to Male CABLE		
				DRAWING NO.	LC170308-01	REV	A