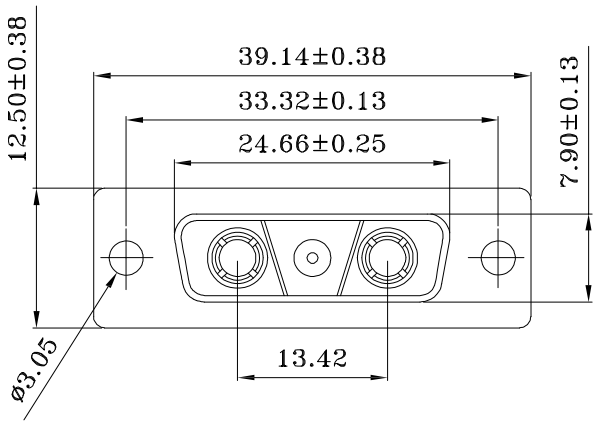


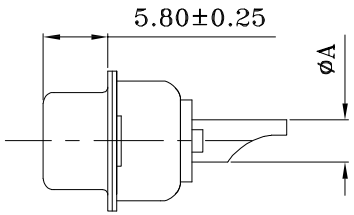


High Power Contact Current Rating:
10,20 or 40AMPS
High Power Contact Resistance:
2.7 Milliohms Max.
Dielectric Withstanding Voltage:
1000V AC For 1 Minute
Insulation Resistance:5000MΩ Min.
Temperature Range:-25℃ to +85℃

PART NO.:

B09-3V341140-X1

CURRENT RATING&DIMENSION ¢A:
A:10 AMPS ¢1.70mm
B:20 AMPS ¢2.80mm
C:30 AMPS ¢3.20mm
D:40 AMPS ¢4.60mm

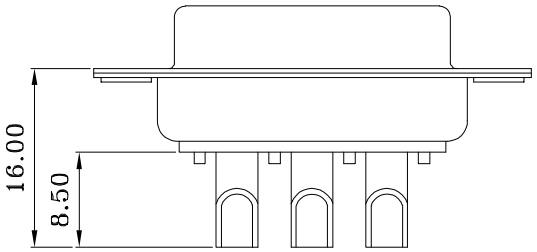


| ITEM | DESC. | MATERIAL | REMAKS | PART REMAKS |
|---|---|---|---|---|
| 4 | HOUSING | PBT+30%GF | COLOR:BLACK | |
| 3 | FRONT PLASTIC | STEEL | OVER-PLATING:Sn | |
| 2 | FRONT SHELL | STEEL | OVER-PLATING:Ni | |
| 2 | HIGH POWER CONTACT | BRASS | PLATING:AU G/F | |
| 1 | SIGNAL CONTACT | BRASS | PLATING:AU G/F | |

| SIDE | DATE | DESCRIPTION | APPROVER |
|---|---|---|---|
| 3 | | | |
| 2 | 2013/08/16 | 修正料号 | King Zhou |
| 1 | 2012/09/26 | 新版发行 | King Zhou |

QUALITY SYMBOLS
□: CRITICAL
⊠: MAJOR
▽: ZERO DEFECT
▽: S.P.C

Toleance
x. ±0.50
.x ±0.30
.xx ±0.15

| NAME: | High-Power 3V3 Female Solder Type | | | | PART NO. | B09-3V341140-X1 | |
|---|---|---|---|---|---|---|---|
| REV: | B | UNIT: | mm | DRW BY | CHK BY | APP BY | DRAWING NO. |
| SCALE: | N:1 | DATE: | 2012/09/26 | DAW NHU | KING ZHOU | | ADA-004 |

东莞市箐国电子有限公司