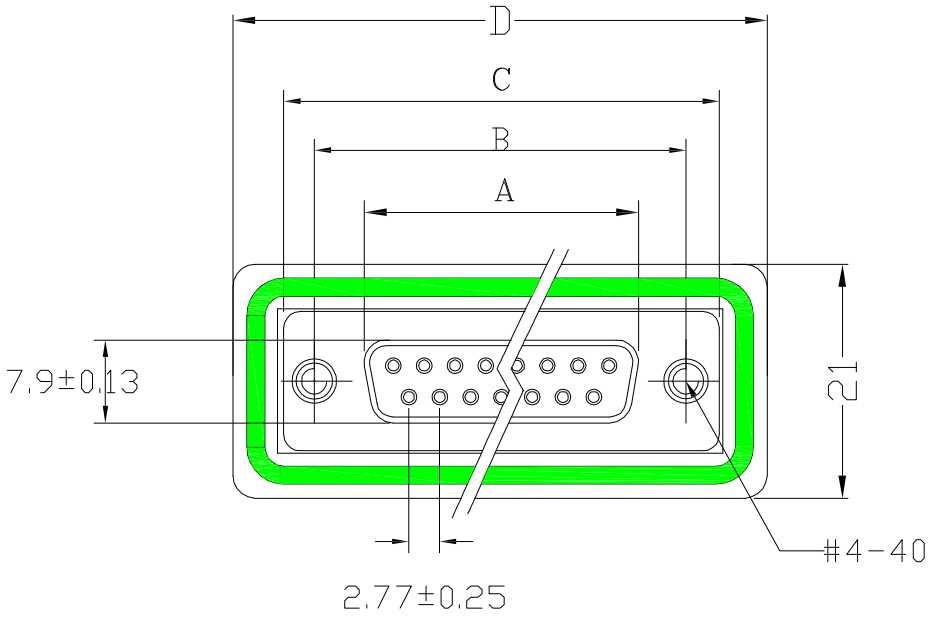

No. of Contact	A ±0.25	B ±0.13	C ±0.38	D±0.25
09	16.33	24.99	30.81	39.6
15	24.66	33.32	39.14	48
25	38.38	47.04	53.04	61.6
37	54.84	63.50	69.32	78

MATERIALS AND FINISH

SHELL : STEEL MATERIAL, FRONT NICKEL FINISHED
BACK SHELL TIN FINISHED
INSULATOR : PBT THERMOPLASTIC, 30% GLASS FILLED, UL 94V-0 RATED,
CONTACT MATERIAL : BRASS
CONTACT FINISH : FULL GOLD FINISHED
WITH #4-40 THREADED RIVETS
Protection grade ; Ingress Protection ;
Environmental IP67

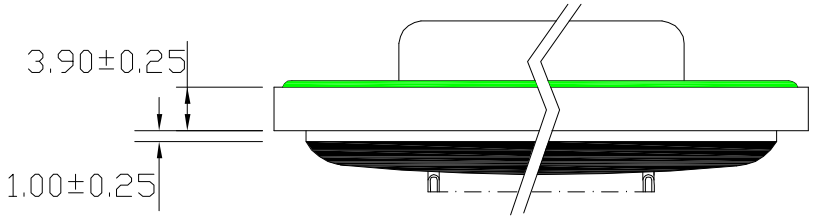

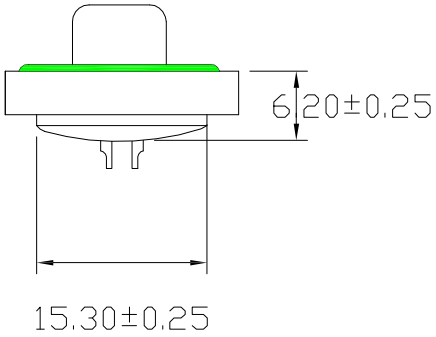

ELECTRICAL CHARACTERISTICS

CONTACT CURRENT RATING : 5.0 AMPS
CONTACT RESISTANCE : 30 MILLIOHMS MAX.
DIELECTRIC WITHSTANDING VOLTAGE : 1000 V AC MIN.
INSULATION RESISTANCE : 5000 MEGAOHMS MIN.
TEMPERATURE RATING : -55°C ~ +105°C
GRADE:IP67

PART NO:

BA5-0XX411AN-01

No. of Contact:
09: 9Pin
15: 15Pin
25: 25Pin
37: 37Pin

SIDE	DATE	DESCRIPTION	APPROVER
3			
2			
1	2021/09/07	新版发行	King Zhou

QUALITY SYMBOLS
□: CRITICAL
⊠: MAJOR
▽: ZERO DEFECT
▽: S.P.C

Toleance
x. ±0.50
.x ±0.30
.xx ±0.25

NAME:	D-Sub Female Machine Pin, Solder Type (IP67 waterproof)			PART NO.	BA5-0XX411AN-01		
REV:	A	UNIT:	mm	DRW BY	CHK BY	APP BY	DRAWING NO.
SCALE:	N:1	DATE:	2021/09/07	DAWN HU	KING ZHOU		PD-DB02

东莞市箐国电子有限公司