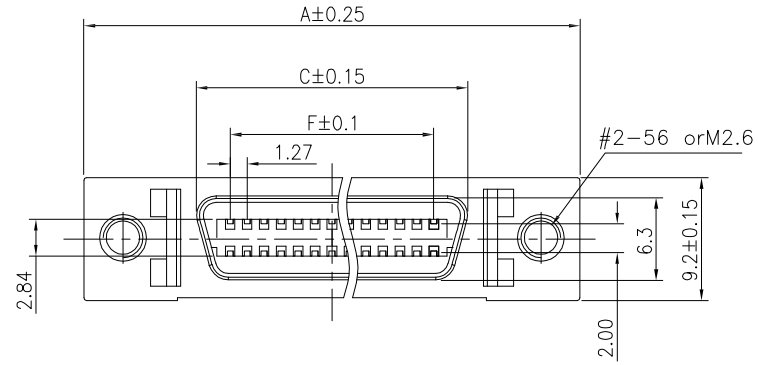


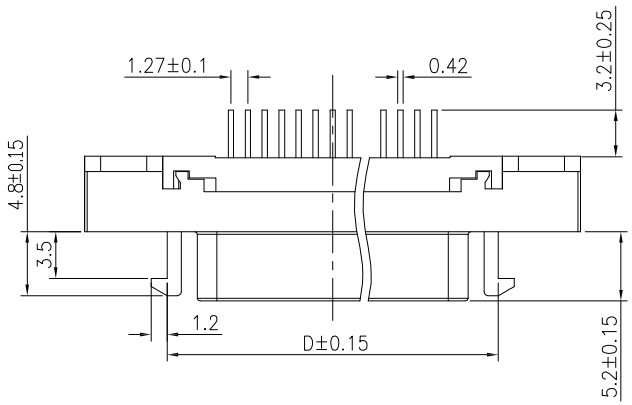


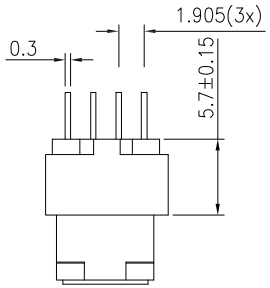


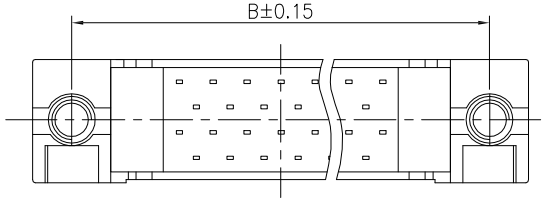


Part No:

B03-XXX818CB-01

No. of Pin:

014: 14Pin

~

100: 100Pin

| No. of Pin | DIME NSIONS | | | | | |
|---|---|---|---|---|---|---|
| | A | B | C | D | E | F |
| 14 | 29.51 | 23.64 | 12.6 | 17.25 | 23.64 | 7.62 |
| 20 | 33.32 | 27.45 | 16.43 | 21.06 | 27.45 | 11.43 |
| 26 | 37.13 | 31.26 | 20.24 | 24.76 | 31.26 | 15.24 |
| 36 | 43.48 | 37.61 | 26.5 | 31.11 | 37.61 | 21.59 |
| 40 | 46.08 | 40.15 | 29.14 | 33.30 | 40.15 | 24.13 |
| 50 | 52.37 | 46.5 | 35.39 | 40.0 | 46.5 | 30.48 |
| 68 | 64.00 | 57.92 | 46.90 | 51.00 | 57.92 | 41.91 |
| 100 | 84.18 | 78.23 | 67.14 | 71.50 | 78.23 | 62.23 |

- **ELECTRICAL CHARACTERISTICS**

Contact Currect Rating: 1 Amp

Dielectric Withstanding Voltage: 500V AC

Insulation Resistance: 500MΩ/Min

Contact Resistance: 35mΩ/Max

Operation Temperature: -45°C ~ +85°C

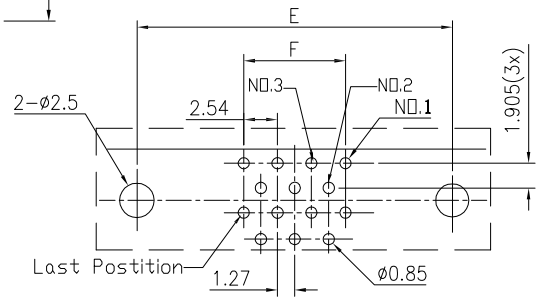


PCB Layout
(14,26,50 Pos)

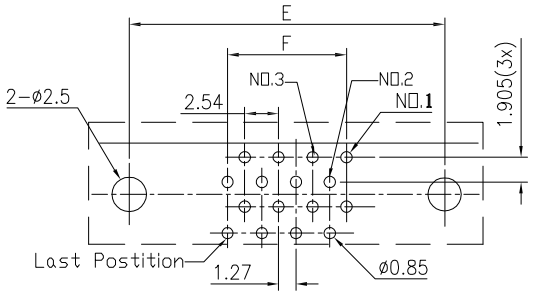


PCB Layout
(20,36,40,68,100 Pos)

| ITEM | DESC. | MATERIAL | REMAKS | PART REMAKS |
|---|---|---|---|---|
| 3 | SHELL | ZINC ALLOY | PALTING: Ni | |
| 2 | HOUSING | PBT+30%GF | COLOR: BLACK | |
| 1 | TERMINAL | COPPER ALLOY | CONTACT PALTING: Au G/F<br>SOLDER PALTING: Ni | |

| SIDE | DATE | DESCRIPTION | APPROVER |
|---|---|---|---|
| 3 | | | |
| 2 | | | |
| 1 | 2020/07/16 | 新版发行 | King Zhou |

QUALITY SYMBOLS

□: CRITICAL ⊠: MAJOR

▽: ZERO DEFECT ▽: S.P.C

| Toleance | |
|---|---|
| x. | ±0.50 |
| .x | ±0.30 |
| .xx | ±0.15 |

| | | | | | | | |
|---|---|---|---|---|---|---|---|
| NAME: | SCSI MDR Female V/T DIP Type | | | | PART NO. | B03-XXX818CB-01 | |
| REV: | A | UNIT: | mm | DRW BY | CHK BY | APP BY | DRAWING NO. |
| SCALE: | N:1 | DATE: | 2020/07/16 | DAW NHU | KING ZHOU | | B03-818 |

东莞市箐国电子有限公司